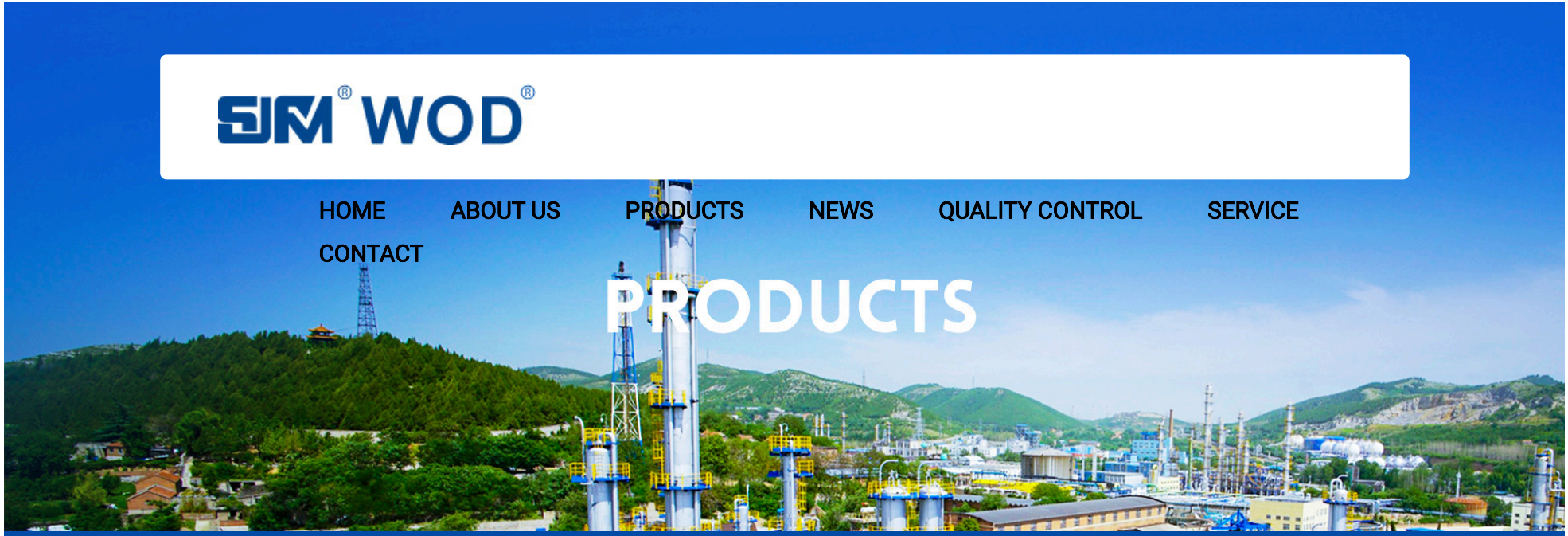

One piece ball valve
Two piece ball valve
Three piece ball valve
Three way ball valve
Threaded gate valve
Threaded stop valve
Threaded check valve
Thread filter
Plumbing valve
Intelligent control valve
Flange ball valve series
Flange gate valve series
Flange stop valve series
Flange check valve series
Flange filter series
Hard seal ball valve

Q41f-16 stainless steel national standard flange ball valve

EXECUTIVE STANDARDS AND PERFORMANCE SPECIFICATIONS:

NOMINAL DIAMETER	DN8-DN100、1/2"-10"、Q41F-16
NOMINAL PRESSURE	PN1.6、2.5、4.0、6.4 MPA
SHELL STRENGTH TEST PRESSURE	PN2.4 、3.8 、6.0 、9.6 MPA
LOW PRESSURE AIR TIGHTNESS TEST PRESSURE	0.8MPA
APPLICABLE MEDIA	WATER、OIL、GAS、NITRIC ACID、ACETIC ACID

DESIGN AND MANUFACTURING STANDARDS	ANSI B16.34、GB/T-12224-2015
TEST STANDARD	API598、GB/T13927-2008、EN12516-3
THREAD STANDARD	G、BSP、BSPT、DIN259 、DIN2999、ISO228 、NPT 、PT 、ISO7/1

MATERIAL LIST OF MAIN ACCESSORIES:

VALVE BODY	A216（WCB)、A351 CF8、CF8M、CF3M、321、2205
VALVE COVER	A216（WCB）、A351 CF8、CF8M、CF3M、321、2205
SPHERE	SUS304、SUS316 、SUS316L、SUS321、SUS2205
VALVE STEM	SUS304、SUS316 、SUS316L、SUS321、SUS2205
VALVE SEAT	PTFE、RPTFE、M111、M1600、M1700、PPL 、PCTFE、PEEK
FILLER	PTFE、RPTFE、M111、M1600、M1700、PPL

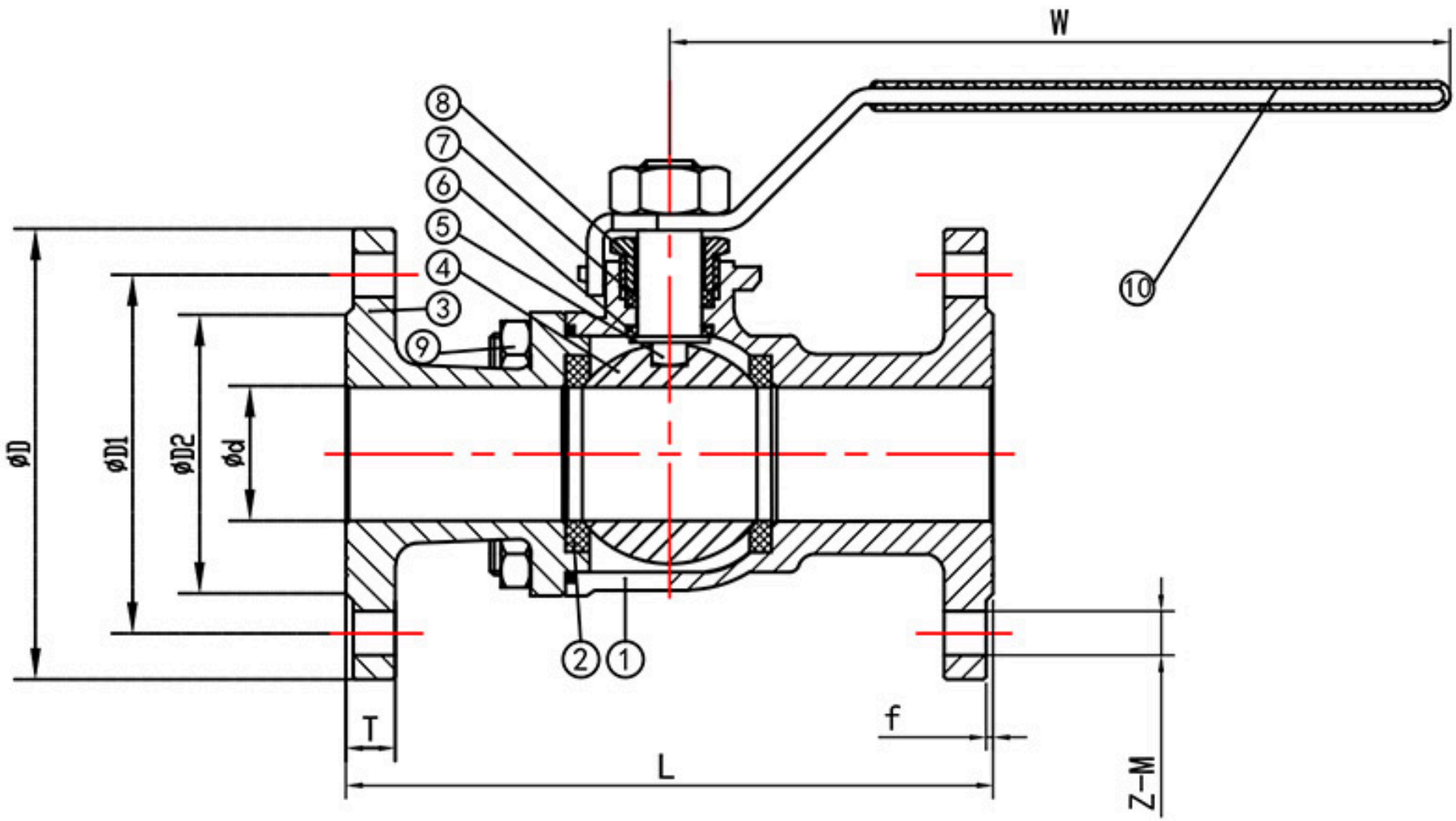

MAIN PARTS MATERIALS:

NO.	PART NAME	MATERIAL	QTY
1	BODY	CF8/CF8M	1
2	SEAT	PTFE/RPTFE	2
3	CAP	CF8/CF8M	1

4	BALL	SS304/316	1
5	STEM	SS304/316	1
6	THRUST WASHER	PTFE/RPTFE	1
7	PACKING	PTFE/RPTFE	1
8	GLAND	SS304/316	1
9	BOLT	S201/S304	4~12
10	HANDLE	S201/S304	1
11	NUT	S201/S304	1

MAIN SIZE:

DN	d	D	D1	D2	T	f	L±1.5	W	Z-M
15	15	95	65	46	14	2	132	129	4-14
20	20	105	75	56	14	2	142	132	4-14
25	24	115	85	61	14	2	147.5	160	4-14
32	32	135	100	77	15	2	168	160	4-18
40	38	141	110	81	15	2	177	185	4-18
50	50	157	125	90	17	2	198	185	4-18
65	64	176.5	144	114	17	2	220	220	4-18
80	78	190	160	130	17	2	250	220	8-19
100	98	211	180	150	20	2	280	298	8-19

Product description:

The structure of the ball valve: it is assembled by the valve body, the valve cover and the ball core. The ball core is connected by the valve stem, and the shaft can be rotated 90 degrees to realize the opening and closing function. It is mainly used for pipeline switch and emergency cut-off. It can also design ball core V-shaped opening to achieve flow regulation function.

Structural features:

A light torque: the elastic valve seat is in elastic contact with the ball core, and the sealing specific pressure is controllable, which provides elastic avoidance for the ball when rotating. The operating torque is uniform without jamming, the hand feels lubricated, and there is no locking when opening. The valve seat shall be chamfered to avoid that the ball mouth will not be embedded into the valve seat under the condition of high pressure difference.

B the valve seat has strong sealing performance. The pre-sealed of the elastic valve seat forms an effective self sealing effect under the pressure of the medium after the valve is closed.

C. the valve seat has long service life, long pre-compression stroke of elastic valve seat and large amount of wear compensation. At the same time, it has the form of upstream seal and downstream support, so that it can be sealed from the beginning of closing to the stroke before sealing without medium pressure. Only when the seal is formed at the moment of closing, the pressure on the sealing surface of the valve seat will rise, so as to achieve sealing durability.

D. valve seat trimming and wrapping cold flow limiting structure: valve seat trimming effectively uses the unsupported area of the ball and valve seat, and the valve seat lining ring is wrapped to prevent cold flow collapse, so as to realize high pressure bearing.

E. the lower convex design of the valve stem can prevent flying out and prevent valve stem leakage.

F anti static design ensures that the current between the ball core valve rod and the valve body is directed outward, effectively avoiding safety accidents caused by static electricity.

G the O-ring on the valve stem has a good self sealing effect and plays an effective and sealing role in the medium in the valve cavity.

H valve rod packing V-shaped design, and the plane seal of rod valve packing compression ring is precision machined and assembled to achieve no leakage effect.

I disc spring compensation design to adapt to the automatic elastic compensation effect in case of seal packing ring wear, so as to reduce leakage.

J full flow design ensures the rapid flow of medium in the valve, so as to save time, high efficiency and other characteristics.

K WOD Valve, SJFM brand and WOD brand, with unique and advanced design concept, combined with high-end and exquisite CNC processing technology, the processing size of each valve is strictly controlled within the tolerance range, and the processing size of all structural design and accessories selection is strictly in accordance with the industry front-end standards and 6S, CE, TS, ISO9001, ISO14000, ISO18000, API, GB and other standards. Make each valve practical, safe and long-life, and bring high utilization value to customers.

© 2021 ZHEJIANG WOD VALVE CO.,LTD. All Rights Reserved.

备案号：浙ICP备2021021989号-2 Design: Nsoso.com

浙公网安备 33039902000220号

New Products, Innovations, Trends & More

SEND

Scan the qrcode